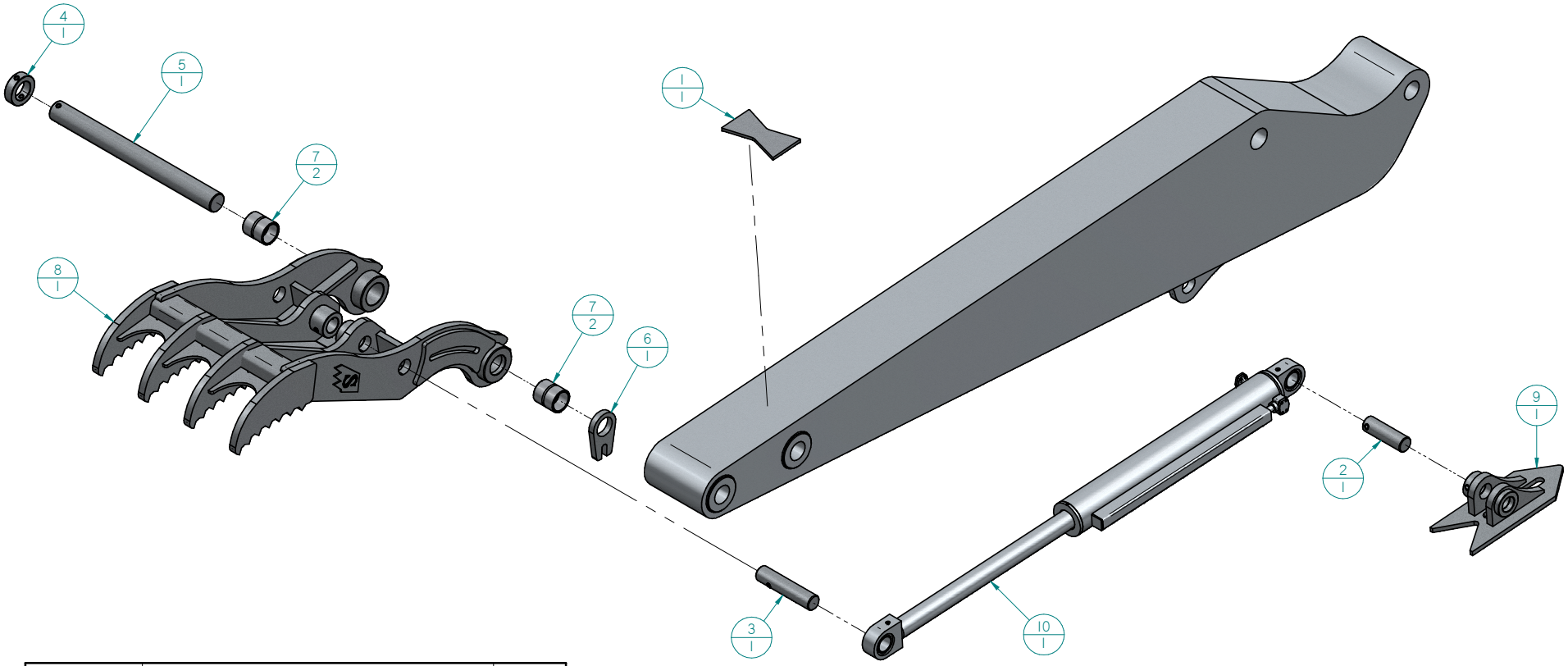

Item Number	File Name	Quantity
1	Cylinder Stop Plate	1
2	Cylinder Hitch Pin (Baseplate)	1
3	Cylinder Hitch Pin (Thumb)	1
4	Retaining Collar (Main Pin)	1
5	Main Pin	1
6	Pin Lock	1
7	Bushing (Main Pin)	2
8	Head Section Assembly	1
9	Hydraulic Baseplate Assembly	1
10	Hydraulic Cylinder	1

DRAWN BY: mvaughn	08/17/17	Solesbee's A KINSHOFER COMPANY
DIMENSIONS ARE IN INCHES UNLESS OTHERWISE SPECIFIED ANGLES ± 1° 2 PL ± .02 3 PL ± .005		TITLE: Main Pin Thumb on stick (Parts Drawing)
CONFIDENTIAL		SIZE: D DWG NO. REV:
IMAGES, SPECIFICATIONS, DESCRIPTIONS, AND ANY OTHER PROPRIETARY INFORMATION CONTAINED HEREIN IS THE PROPERTY OF SOLESBEE'S, LLC AND MAY NOT BE REPRODUCED, DIVULGED, PUBLISHED, TRANSFERRED, OR DISSEMINATED WITHOUT WRITTEN PERMISSION FROM AN AUTHORIZED AGENT.		FILE NAME: Main Pin Thumb on stick (Parts Drawing).dft
		SCALE: WEIGHT: 1172.879 lbm SHEET 1 OF 1